Analytical Cume
April 18, 2008

Coulometric titration of sulfite in wine. Sulfur dioxide is added to many foods as a preservative. In aqueous solution, the following species are in equilibrium:

$$SO_2 \rightleftharpoons H_2SO_3 \rightleftharpoons HSO_3^- \rightleftharpoons SO_3^{2-} \qquad \text{(A)}$$

Sulfur dioxide Sulfurous acid Bisulfite Sulfite

Bisulfite reacts with aldehydes in food near neutral pH:

(B)

Aldehyde Adduct

Sulfite is released from the adduct in 2 M NaOH and can be analyzed by its reaction with I_3^- to give I^- and sulfate. Excess I_3^- must be present for quantitative reaction.

Here is a coulometric procedure for analysis of total sulfite in white wine. Total sulfite means all species in Reaction (A) and the adduct in Reaction (B). We use white wine so that we can see the color of a starch-iodine end point.

1. A coulometric cell shown below consists of two electrodes, one incased by a glass frit and the other, working electrode, out in solution. The cell contains 30 mL of 1 M buffer plus 0.1 M KI. A power supply forces a constant current of 10.00 mA through the electrodes. I_3^- (tri-iodide) is generated at the working electrode (the anode) by passing a known current for a known time through the cell in. The reaction in the cathode compartment, behind the frit is reduction of H_2O to H_2 and OH^-. The power supply is left on for exactly 4.00 min to generate I_3^- at the anode.

2. Mean while, 9.00 mL of wine plus 0.8 g NaOH is mixed and diluted to 10.00 mL. The NaOH releases sulfite from its organic adducts. 2.000 mL of the wine/NaOH solution is placed into the cell, where the sulfite reacts with I_3^-, leaving excess I_3^-.

3. Now, 0.500 mL of 0.050 7 M thiosulfate is added to consume I_3^- by the reaction

$$I_3^- + 2S_2O_3^{2-} \leftrightarrow 3I^- + S_4O_6^{2-}$$

But leaving excess thiosulfate.

4. Starch indicator is added to the cell and fresh I_3^- is generated with a constant current of 10.0 mA. A time of 131 s was required to consume excess thiosulfate ($S_2O_3^{2-}$) and reach the starch end point.

Questions:

A. During the tri-iodide generation, write balanced cell reaction occurring at the two electrodes by starting with the half-reactions for the anode and cathode

B. Using the reaction in part A, calculate the number of moles of tri-iodide produced during the 131 s generation.

C. Using the balanced chemical reaction between thiosulfate and tri-iodide, find the number of moles of thiosulfate left over from the addition.

D. Now calculate the moles of added thiosulfate.

E. Calculate the moles of thiosulfate that was reacted with the tri-iodide after the 4.00 min generation.

F. Calculate the moles of I_3^- the answer in E is equivalent to.

G. How many moles of I_3^- was generated during the first 4.00 min. period?

H. Calculate the number of moles of tri-iodide that was consumed by the sulfite in the coming from the wine.

I. Write a balanced chemical reaction between sulfite and tri-iodide

J. Find the number of moles of sulfite that was contained in the 2.00 mL aliquot of wine solution.

K. What is the concentration of total sulfites in the undiluted wine?

E^o Table

$I_3^- + 2e^-$	$\leftrightarrow$ $3I^-$	+0.535
$SO_4^{2-} + H_2O + 2e^-$	$\leftrightarrow$ $SO_3^{2-} + 2OH^-$	−0.936

$2H_2O + 2e^- \leftrightarrow H_2 + 2OH^-$ -0.828

$S_4O_6^{2-} + 2e^- \leftrightarrow 2S_2O_3^{2-}$ $+0.1$

Faraday's law:
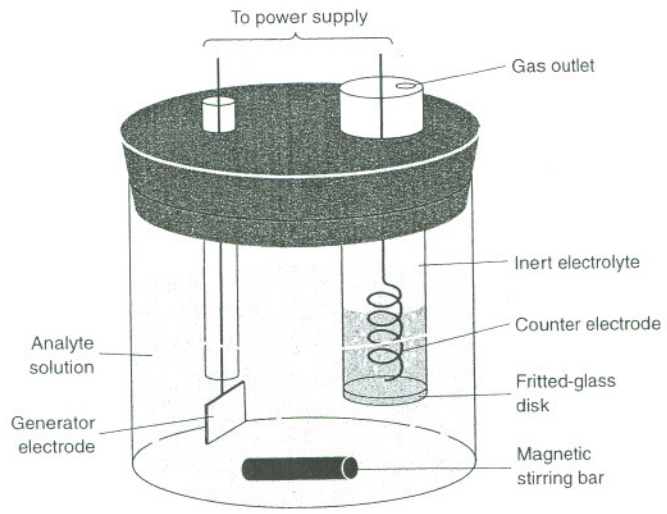
1 mole of electrons contains 96,483 coulombs of charge.
Current is coulombs/s